hp27-o VESA adapter

Assembly instructions

The VESA adapter is compatible with the following products from (hp.com):

OMEN 27, OMEN X27

The VESA adapter allows you to conveniently mount your HP brand monitor to a monitor arm with a VESA hole pattern ***(75 x 75mm***). Use the included screws and nuts.

If you want to mount your VESA adapter directly to the wall, use suitable screws and dowels ***(not included***).

Important Safeguards

Please read these instructions carefully and keep them for future reference. If you pass the product on to third parties, these instructions should always be included. Failure to follow these instructions may result in injury or damage to persons or the product, for which we cannot accept any liability.

IMPORTANT - KEEP FOR FUTURE REFERENCE.

• This product should always be used in accordance with the specified safety instructions.
• Do not install your VESA adapter in combination with the monitor in places where there are people below.
• Do not exceed the maximum weight of the compatible monitor models as this may result in serious injury or damage to property.
• Observe the maximum ambient temperature of 35°C when using the product.
• Do not mount the VESA adapter near a heat source or in direct sunlight, as this could heat up the adapter.
• Check whether your mounting point (e.g. monitor arm) can withstand the weight of the monitor with VESA adapter.
• The product is designed exclusively for mounting with a hole pattern of 75x75 mm.
• After installing the VESA adapter, the position of the monitor must be readjusted to ensure correct ergonomics.

⚠ CAUTION

Ensure that the device is switched off and disconnected from the power supply before installation to avoid possible injury or damage.

1. Before First Use

Check the product carefully for possible transport damage and for the absence of accessories, such as screws, which should be included in the scope of delivery.

⚠ CAUTION

Make sure that packaging materials and small screws and parts contained therein are inaccessible to children to minimize the risk of choking and other risks.

2. Maintenance and Cleaning

2.1 Maintenance

- It is recommended to check every three months that all screws are still tight. Also, regularly check the condition of all components of the product.
- Store the product in a cool and safe place, ideally at a maximum storage temperature of 40°C. For additional safety, keep the product away from children and preferably in its original packaging.
- Avoid any vibrations and shocks so as not to affect the life and functionality of the product.

2.2 Cleaning

- No corrosive or hot cleaning agents should be used to clean the product. Likewise, wire brushes, metal or other sharp materials are unsuitable for cleaning and should not be used.
- For gentle and effective cleaning, the use of a soft, damp cloth is recommended.

3. Waste Disposal

For the disposal of this product we recommend to contact the responsible local authorities or disposal services. They can provide you with detailed information on available disposal options and recycling centers in your area.

4. Manufacturer Information

3idee Technologies S.à r.l.
5 Um Lenster Bierg
L-6125 Junglinster
Luxembourg

5. Help and Feedback

If you need help with your article, we are here for you. We also appreciate any feedback.

https://help.3idee.eu/en/contact

Scope of Delivery Accessories

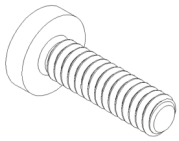

4x M4x14 Phillips head screw (**SP9**)

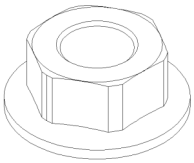

4x M4 Locknut (**SP9**)

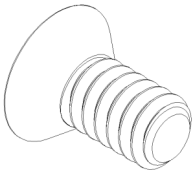

2x M3x6 Phillips head countersunk screw (**SP9**)

Horizontal / Vertical Alignment

Please note: Not all VESA adapters and monitors are designed for vertical (upright) orientation. This limitation is often due to the specific geometry of the adapter or monitor. Do not ignore this information, as the load limit of the adapter can quickly be exceeded if not installed properly.

We are continuously working on developing monitors and adapters that are also suitable for vertical orientation.

However, monitors are designed for horizontal alignment by default.

Horizontal Mounting: YES

Vertical Mounting: NO

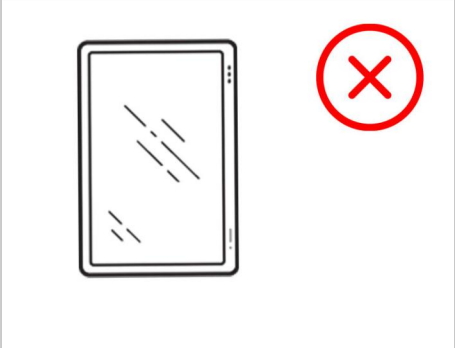

Assembly Instruction

Step 1

Place your screen in a safe, soft place so that your screen does not get damaged.

Remove the base of your monitor if it is already attached. Simply use the click mechanism on the monitor mount and pull the foot upwards.

Step 2

Now put your stand down securely and remove the holder, which is attached to the side with 2 small screws.

Simply unscrew these 2 screws. (Figure 1)

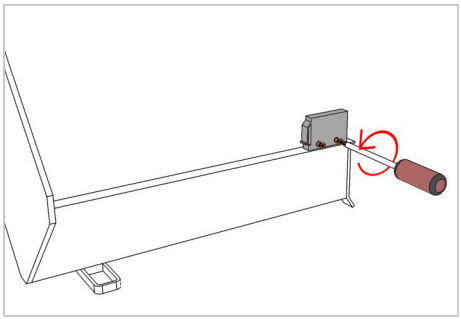

Figure 1

Step 3

Now pull off the shot to the top, we will need this again in the next step. (Figure 2)

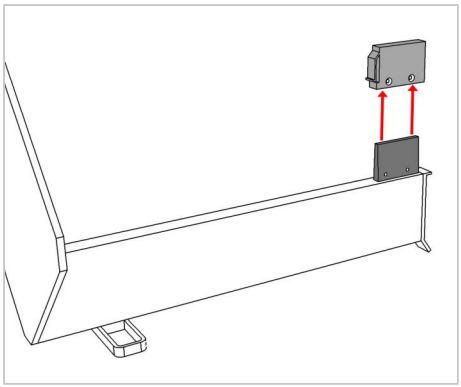

Figure 2

Step 4

Now take the 3idee VESA adapter and put the mount that you just removed from your Omen monitor onto the VESA adapter. (Figure 3)

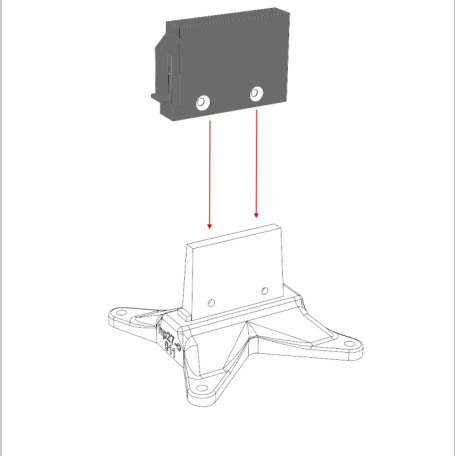

Figure 3

Step 5

Now take the **included 2** small screws and attach the mount to the 3idee VESA adapter. (Figure 4)

Please do not tighten the screws too much, otherwise the thin mount from HP can crack.

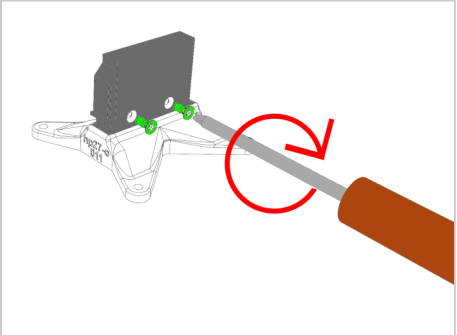

Figure 4

Step 6

⚠ **Important:** If the instructions in this step are not suitable for your device, please follow the mounting guidelines of the manufacturer of your monitor arm or swivel arm to mount the monitor to the wall or swivel arm.

Mount the 3idee VESA adapter to your monitor arm or directly to the wall. (Figure 5)

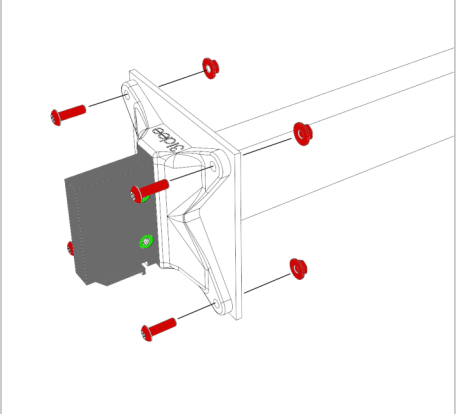

Figure 5

Step 7

Once you have completed the last step, please check if all screws are tightened. (Figure 6)

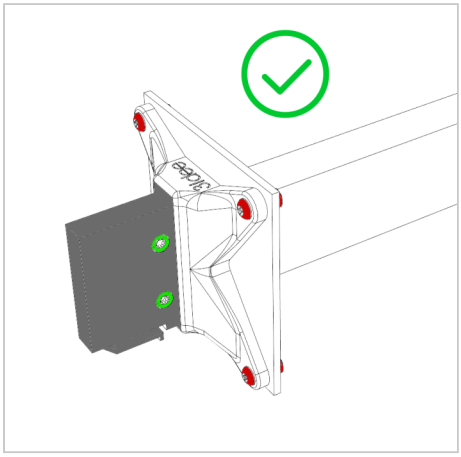

Figure 6

Step 8

Plug the monitor onto the adapter so that it audibly clicks into place. (Figure 7)

Note: Apply some pressure if necessary !

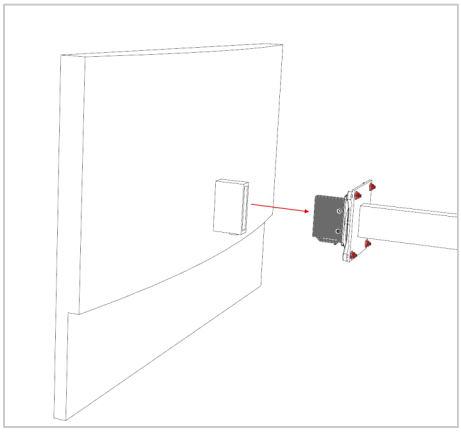

Figure 7

Step 9

Please check again if the VESA adapter is properly snapped into your monitor and all screws are properly tightened (Figure 8).

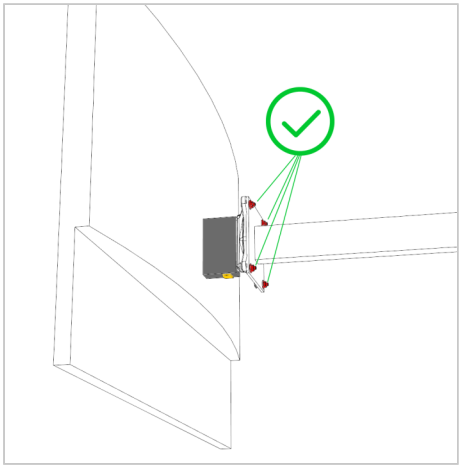

Figure 8